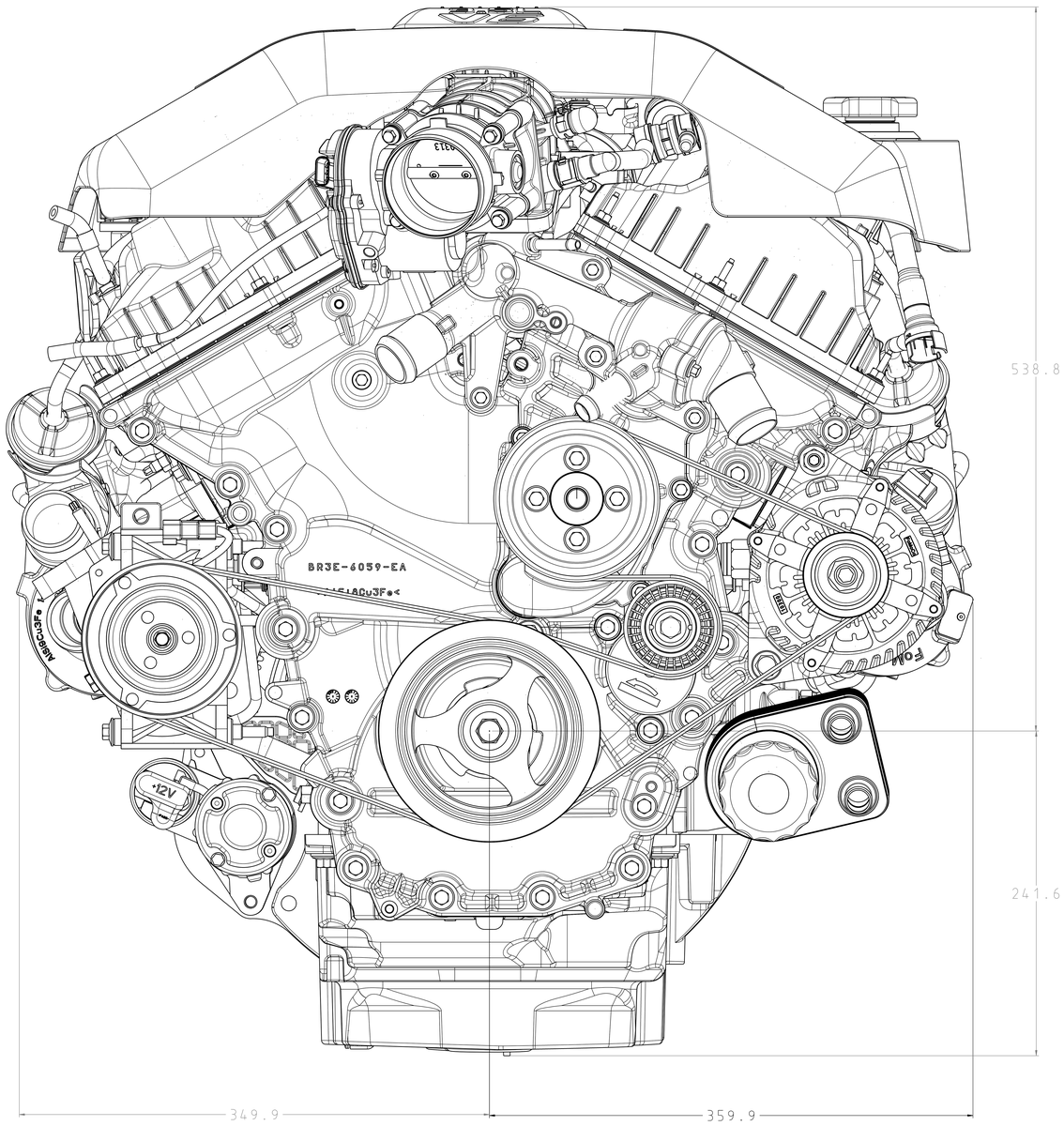
BR3E-6059-EA
12V
538.8
241.6
349.9
359.9

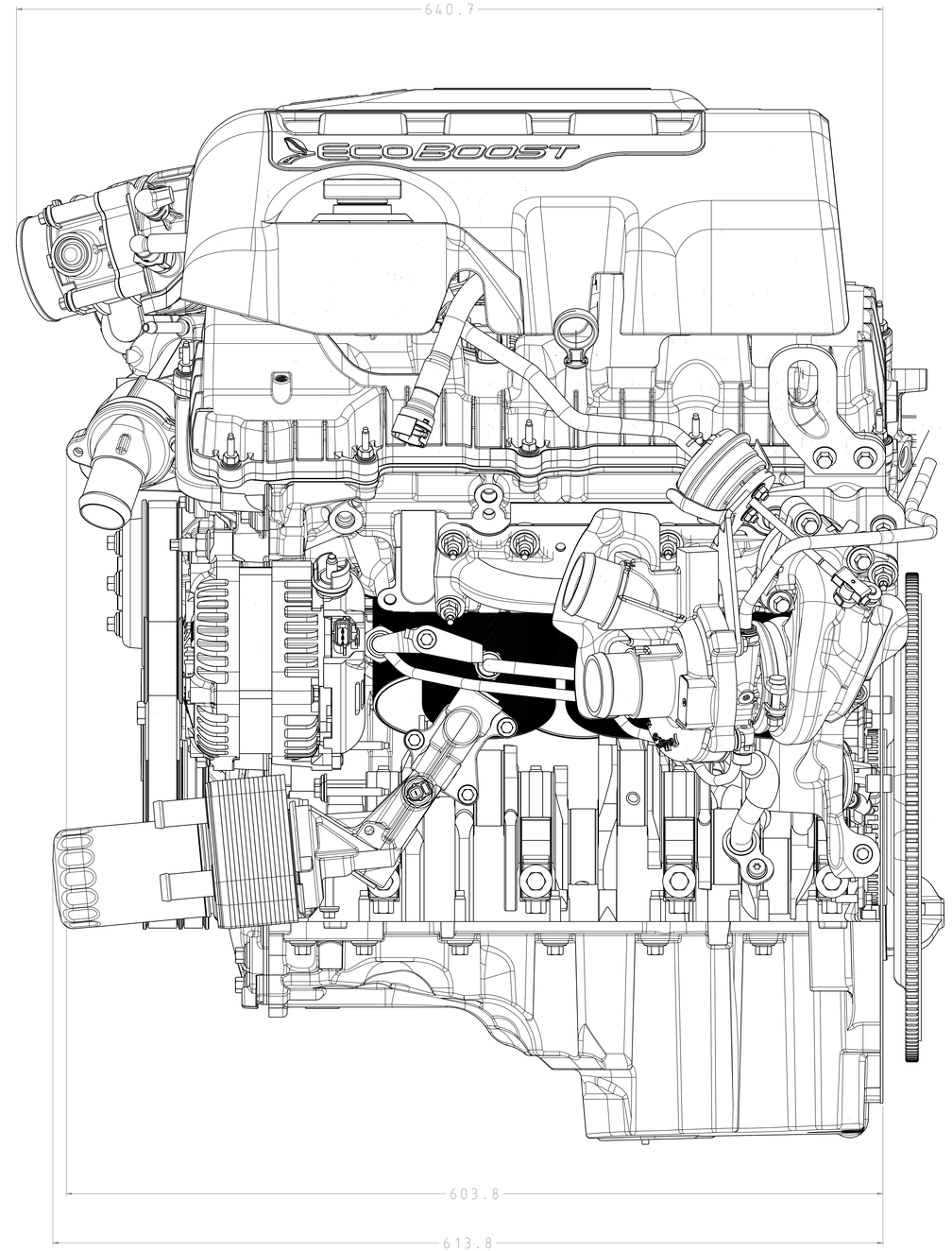
ECOBOOST
640.7
603.8
613.8